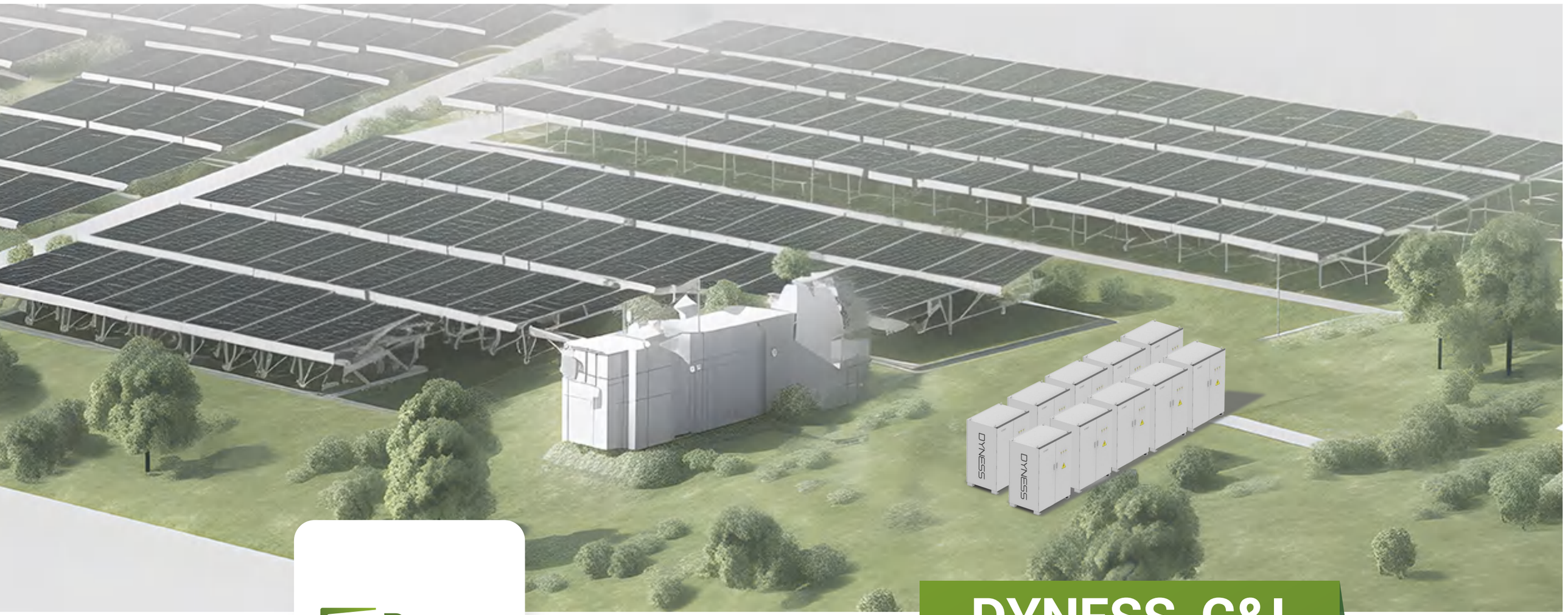


Dyness
ENERGY STORAGE SYSTEM
Discover Your Nature

# DYNESS C&I

ENERGY STORAGE SOLUTIONS

Address: No.996 Tiangu 7th Rd. High-tech Zone, Xi'an, Shaanxi, China
Email: sales@dyness-tech.com
Tel: +86 400 666 0655
Web: www.dyness-tech.com

File version-20230426-V4-EN Information might be subject to change without notice during product improving.

Dyness
ENERGY STORAGE SYSTEM

www.dyness-tech.com

# DIRECTORY

## DYNESS COMMERCIAL SOLUTIONS

Low Voltage Rack System
Rack System LV1 07
Rack System LV2 09
Rack System LV4 11

High Voltage Rack System
Rack System HV1 17
Rack System HV2 19
Rack System HV4 21
PowerStone 25

All-in-one Energy Storage System
DH200F 27

Typical Application Scenarios 31

## ABOUT DYNESS

Dyness is located in China, owning three manufacturing centers in Taizhou and Suzhou. We have 550+ employees, and a R&D team of 150+ people with more than10 years experience in this industry, who has deep understanding for energy storage and global carbon neutrality.

Dyness owns more than 90 patents and many international certifications such as TUV, UL, CE, JET, CEC etc. Our products have been delivered to 100+ countries including Europe, America, Australia, Africa etc, serving more than 200,000 households worldwide.

Powered by cutting-edge technology and innovation, Dyness is committed to providing customers with intelligent energy solutions, maximizing the use of green energy and making positive contributions to global carbon neutrality.

**100+**
Global footprint

**90+**
Patents

**200，000**
Serviced Families

**150+**
R&D team

**550+**
Employees

**3**
Production Bases

# Products Overview

## Low Voltage system



Rack System LV1



Rack System LV2



Rack System LV4

## High Voltage System




Dyness PowerStone



DH200F(Single cabinet)

## High Voltage System



Rack System HV1



Rack System HV2



Rack System HV4



DH200F(Container)

# LV SERIES

FULLY CERTIFIED
48V/51.2V Battery Module

- *PowerRack LV1*
- *PowerRack LV2*
- *PowerRack LV4*



# Dyness Rack System LV1

Dyness 48V PowerRack LV1 system is designed for 50Ah modules with its smart BMS, no extra communication devices are needed. The entire system is intelligently managed, keeping you powered on all the time.

## Features and Advantages

**High Safety LFP**
Cell level monitoring and balancing

**Modular Design**
Free parallel configuration

**Expandable**
Capacity from 2.4 to 96kWh

**Wide Application**
Cover all needs in commercial fields

**Wide Compatibility**
Matching leading inverter brands

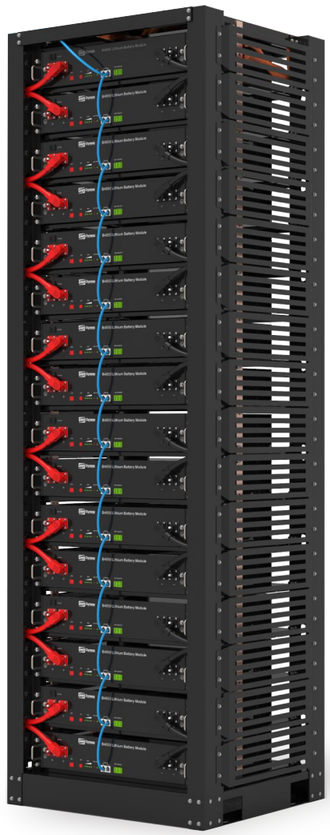

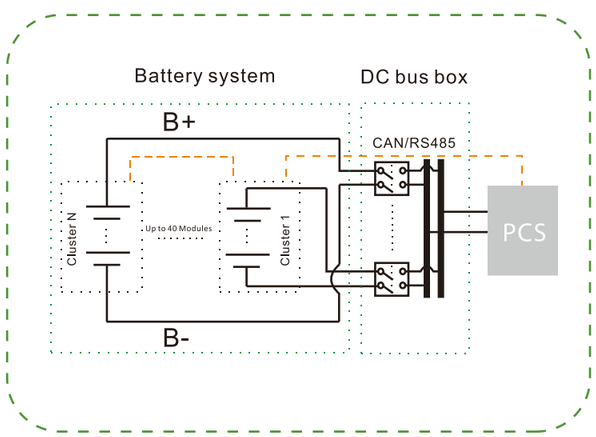




## Technical Parameters of B4850

| Model | B4850 |
|---|---|
| Battery Type | LiFePO4 |
| Nominal Battery Energy | 2.4kWh |
| Nominal Capacity | 50Ah |
| Nominal Voltage | 48V |
| Net Weight | 22kg |
| Dimension(W*D*H) | 480*405*90mm |
| Charging Temp. Range | 0-55℃ |
| Discharging Temp. Range | -20-55℃ |
| Communication | CAN / RS485 |
| Design Life | 10+ Years |
| Calendar Life [1] | >6000 Cycles |
| Protection Level | IP20 |
| Expansion | Up to 40 units in parallel |
| Compatible Inverters | Victron/SMA/Goodwe/Imeon/Solis/SAJ/Growatt/Luxpower /Voltronic/Deye etc. |
| Certification & Safety Standard | UN38.3/CE-EMC/IEC62619/IEC62040/CEC Accredited/CEI-021 /UL1973/REACH/ROHS/UKCA/GOST-R |







## Technical Parameters

| Model | Rack System LV1 | |
|---|---|---|
| Rack Type | PowerRack LV1-10P | PowerRack LV1-16P |
| Battery Module Type | B4850 | B4850 |
| Battery Module Quantity | 10 units | 16 units |
| Battery Type | LFP | LFP |
| Nominal Battery Energy | 24kWh | 38.4kWh |
| Nominal Capacity | 500Ah | 800Ah |
| Nominal Voltage | 48V | 48V |
| Operating Vol. Range | 42-54V | 42-54V |
| Nominal Power Output | 12kW | 19.2kW |
| Max. Power Output | 24kW | 38.4kW |
| Recommend Charging Current | 250A | 400A |
| Recommend Discharging Current | 250A | 400A |
| Net Weight | 310kg | 480kg |
| Dimension(W*D*H) | 601*510*1290mm | 601*510*1957mm |
| Module Quantity and Configuration | 10 Units in parallel | 16 Unitsin parallel |

[1]HV4850 battery module need to be used with BDU50 control unit.

# Dyness Rack System LV2

Dyness 48V PowerRack LV2 system is designed for 75Ah modules with its smart BMS, no extra communication devices are needed. The entire system is intelligently managed, keeping you powered on all the time.

## Features and Advantages

**High Safety LFP**
Cell level monitoring and balancing

**Modular Design**
Free parallel configuration

**Expandable**
Capacity from 3.6 to 180kWh

**Wide Application**
Cover all needs in commercial fields

**Wide Compatibility**
Matching leading inverter brands

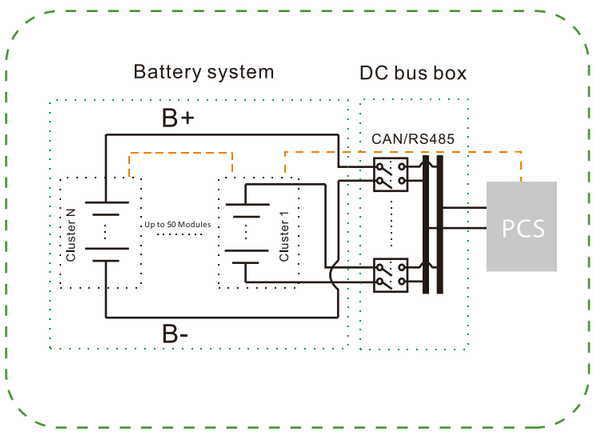




## Technical Parameters of DL3.6

| Model | DL3.6 |
|---|---|
| Battery Type | LiFePO4 |
| Nominal Battery Energy | 3.6kWh |
| Nominal Capacity | 75Ah |
| Nominal Voltage | 48V |
| Net Weight | 32.5kg |
| Dimension(W*D*H) | 480*405*132mm |
| Charging Temp. Range | 0-55℃ |
| Discharging Temp. Range | -20-55℃ |
| Communication | CAN / RS485 / RS232 |
| Design Life | 10+ Years |
| Calendar Life[1] | >6000 Cycles |
| Protection Level | IP20 |
| Expansion | Up to 50 units in parallel |
| Compatible Inverters | Victron/SMA/Goodwe/Imeon/Solis/SAJ/Growatt/Luxpower /Voltronic/Deye etc. |
| Certification & Safety Standard | UN38.3/CE-EMC/IEC62619 |

[1]Test conditions:0.2C Charging/Discharging,@25℃,80% DOD



DL3.6



Rack System LV2 Up to 50 Modules

## Technical Parameters

| Model | Rack System LV2 | |
|---|---|---|
| Rack Type | PowerRack LV2-8P | PowerRack LV2-12P |
| Battery Module Type | DL3.6 | DL3.6 |
| Battery Module Quantity | 8 units | 12 units |
| Battery Type | LFP | LFP |
| Nominal Battery Energy | 28.8kWh | 43.2kWh |
| Nominal Capacity | 600Ah | 900Ah |
| Nominal Voltage | 48V | 48V |
| Operating Vol. Range | 42-54V | 42-54V |
| Nominal Power Output | 14.4kW | 21.6kW |
| Max. Power Output | 28.8kW | 43.2kW |
| Recommend Charging Current | 300A | 450A |
| Recommend Discharging Current | 300A | 450A |
| Net Weight | 359kg | 524kg |
| Dimension(W*D*H) | 601*510*1393mm | 601*510*2013mm |
| Module Quantity and Configuration | 8 Units in parallel | 12 Units in parallel |

# Dyness Rack System LV4

Dyness 48V PowerRack LV4 system is designed for 100Ah modules with its smart BMS, no extra communication devices are needed. The entire system is intelligently managed, keeping you powered on all the time.

## Features and Advantages

**High Safety LFP**
Cell level monitoring and balancing

**APP monitoring**
Remote upgrade aviliable

**Modular Design**
Free parallel configuration

**Expandable**
Capacity from 5.12 to 256kWh

**Wide Application**
Cover all needs in commercial fields

**Wide Compatibility**
Matching leading inverter brands

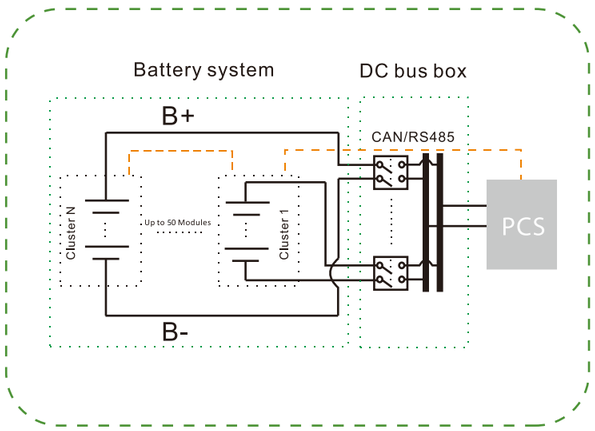


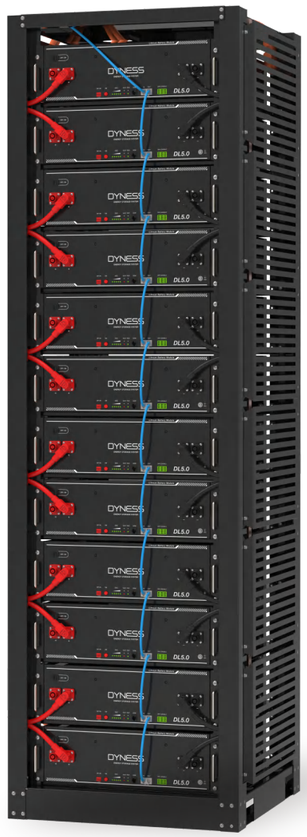



## Technical Parameters of DL5.0

| Model | DL5.0 |
|---|---|
| Battery Type | LiFePO4 |
| Nominal Battery Energy | 5.12kWh |
| Nominal Capacity | 100Ah |
| Nominal Voltage | 51.2V |
| Net Weight | 44kg |
| Dimension(W*D*H) | 481*535*140mm |
| Charging Temp. Range | 0-55℃ |
| Discharging Temp. Range | -20-55℃ |
| Communication | CAN / RS485 / RS232 |
| Design Life | 10+ Years |
| Calendar Life[1] | >6000 Cycles |
| Protection Level | IP20 |
| Expansion | Up to 50 units in parallel |
| Compatible Inverters | Victron/SMA/Goodwe/Imeon/Solis/SAJ/Growatt/Luxpower /Voltronic/Deye etc. |
| Certification & Safety Standard | UN38.3/CE-EMC/IEC62619 |

[1]Test conditions:0.2C Charging/Discharging,@25 ℃,80% DOD


DL5.0


Rack System LV4 Up to 50 Modules

## Technical Parameters

| Model | Rack System LV4 | |
|---|---|---|
| Rack Type | PoweRack LV4-8P | PowerRack LV4-12P |
| Battery Module Type | DL5.0 | DL5.0 |
| Battery Module Quantity | 8 Units | 12 Units |
| Battery Type | LiFePO4 | LiFePO4 |
| Nominal Battery Energy | 40.96kWh | 61.44kWh |
| Nominal Capacity | 800Ah | 1200Ah |
| Nominal Voltage | 51.2V | 51.2V |
| Operating Vol. Range | 44.8~57.6V | 44.8~57.6V |
| Nominal Power Output | 20.48kW | 30.72kW |
| Max. Power Output | 30.72kW | 46.08kW |
| Recommend Charging Current | 400A | 600A |
| Recommend Discharging Current | 400A | 600A |
| Net Weight | 433kg | 644kg |
| Dimension(W*D*H) | 601*510*1392mm | 601*510*2120mm |
| Module Quantity and Configuration | 8 Units in parallel | 12 Units in parallel |

# Product topology diagram

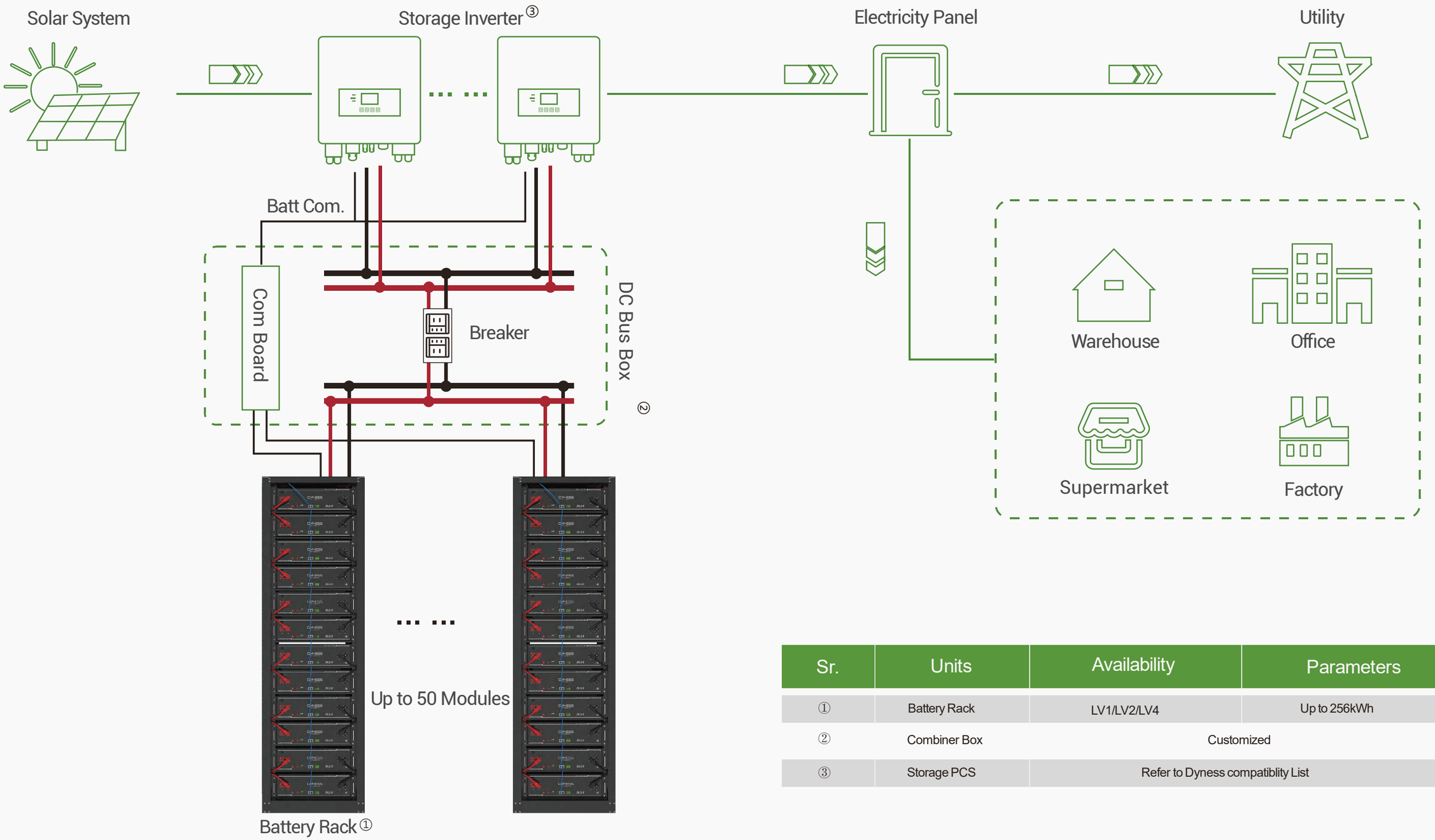


| Sr. | Units | Availability | Parameters |
|---|---|---|---|
| ① | Battery Rack | LV1/LV2/LV4 | Up to 256kWh |
| ② | Combiner Box | Customized | |
| ③ | Storage PCS | Refer to Dyness compatiblity List | |

# HV SERIES

## FULLY CERTIFIED
## High Voltage Battery

- *PowerRack HV1*
- *PowerRack HV2*
- *PowerRack HV4*
- *PowerStone*
- *DH200F*

# Dyness Rack System HV1

Dyness HV1 Rack system is designed for indoor use high voltage battery. The extendable energy design is suitable for both residential and commercial scenarios. The battery modules are specially designed for serial connection to maximize cost effectiveness.

## Features and Advantages

**Voltage Range**
168~876V

**High Safety LFP**
LFP & smart BMS

**Expandable**
Capacity up to 38.4kWh per cluster

**Tailor-made Cabinet**
Suitable for multi-module installation

**High Voltage**
High system effeiciency

**Wide Application**
Cover all needs in commercial fields

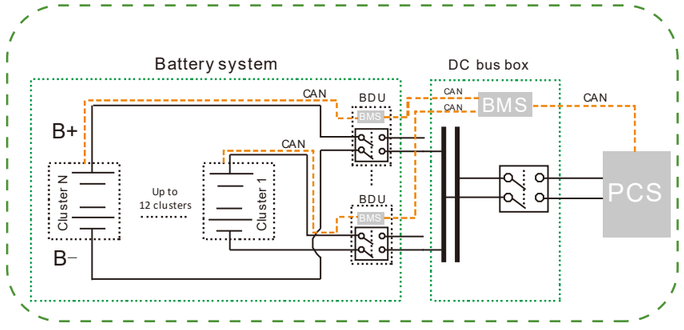






## Technical Parameters of HV4850

| Model | HV4850 |
|---|---|
| Battery Type | LiFePO4 |
| Nominal Battery Energy | 2.4kWh |
| Nominal Capacity | 50Ah |
| Nominal Voltage | 48V |
| Net Weight | 23kg |
| Dimension(W*D*H) | 481*410*89mm |
| Charging Temp. Range | 0-55℃ |
| Discharging Temp. Range | -10-55℃ |
| Communication | CAN |
| Design Life | 10+ Years |
| Calendar Life[1] | >6000 Cycles |
| Protection Level | IP20 |
| Expansion | Up to 16 units in series |
| Compatible Inverters | Goodwe/Solis/SAJ/Sinexcel/Hoymiles/Growatt/Ecatus/Sermatec /ATESS/Sunways etc. |
| Certification & Safety Standard | UN38.3/CE-EMC |

[1]Test conditions:0.2C Charging/Discharging,@25 ℃,80% DOD



HV4850



Rack System HV1



n×Rack System HV1(n≤12)

## Technical Parameters

| Model | Rack System HV1 | |
|---|---|---|
| Rack Type | PowerRack HV1-9s | PowerRack HV1-15s |
| Battery Module Type | HV4850 | HV4850 |
| Battery Module Quantity | 9 units | 15 units |
| Nominal Battery Energy | 21.6kWh | 36kWh |
| Nominal Capacity | 50Ah | 50Ah |
| Nominal Voltage | 432V | 720V |
| Operating Vol. Range | 378-486V | 630-810V |
| Nominal Power Output | 12.96kW | 21.6kW |
| Max. Power Output | 21.6kW | 36kW |
| Recommend Charging Current | 25A | 25A |
| Recommend Discharging Current | 25A | 25A |
| Net Weight | 277.5kg | 444.5kg |
| Dimension(W*D*H) | 601*510*1250mm | 601*510*1917mm |
| Rack System Control unit Type[1] | BDU50 | BDU50 |
| Module Quantity and Configuration | 9 Units in series | 15 Units in series |

[1]HV4850 battery module need to be used with BDU50 control unit.

# Dyness Rack System HV2

Dyness high voltage PowerRack HV2 system is equipped with an intelligent battery control unit in each battery cluster, ensuring high-safety and high-efficiency system operation. The entire system is intelligently managed. Keep you powered on all the time, cut the charges now.

## Features and Advantages

**High Safety LFP**
LFP & smart BMS

**Tailor-made Cabinet**
Suitable for multi-module installation

**High Voltage**
High system effeiciency

**Wide Application**
Cover all needs in commercial fields

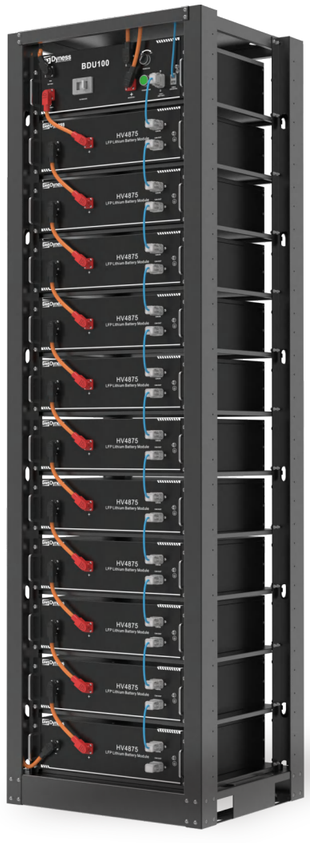


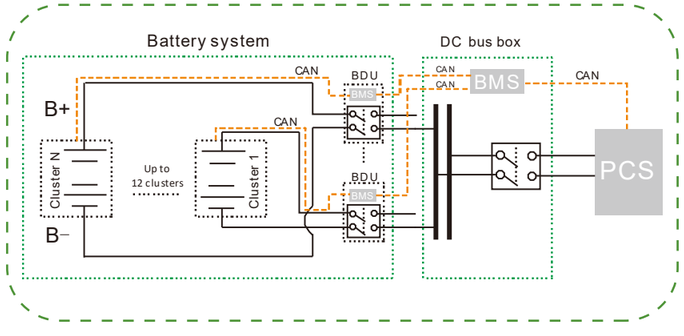


## Technical Parameters of HV4875

| Model | HV4875 |
|---|---|
| Battery Type | LiFePO4 |
| Nominal Battery Energy | 3.6kWh |
| Nominal Capacity | 75Ah |
| Nominal Voltage | 48V |
| Net Weight | 31.5kg |
| Dimension(W*D*H) | 481*410*133mm |
| Charging Temp. Range | 0-55℃ |
| Discharging Temp. Range | -10-55℃ |
| Communication | CAN |
| Design Life | 10+ Years |
| Calendar Life[1] | >6000 Cycles |
| Protection Level | IP20 |
| Expansion | Up to 16 units in series |
| Compatible Inverters | Goodwe/Solis/SAJ/Sinexcel/Hoymiles/Growatt/Ecatus/Sermatec /ATESS/Sunways etc. |
| Certification & Safety Standard | UN38.3/UL1642( Battery Cell) |

[1]Test conditions:0.2C Charging/Discharging,@25 ℃,80% DOD




HV4875



Rack System HV2

n×Rack System HV2(n=12)

## Technical Parameters

| Model | Rack System HV2 | |
|---|---|---|
| Rack Type | PowerRack HV2-7s | PowerRack HV2-11s |
| Battery Module Type | HV4875 | HV4875 |
| Battery Module Quantity | 7 units | 11 units |
| Nominal Battery Energy | 25.2kWh | 39.6kWh |
| Nominal Capacity | 75Ah | 75Ah |
| Nominal Voltage | 336V | 528V |
| Operating Vol. Range | 294-378V | 462-594V |
| Nominal Power Output | 15.12kW | 23.76kW |
| Max. Power Output | 25.2kW | 39.6kW |
| Recommend Charging Current | 37.5A | 37.5A |
| Recommend Discharging Current | 37.5A | 37.5A |
| Net Weight | 295.5kg | 446.7kg |
| Dimension(W*D*H) | 601*510*1393mm | 601*510*2013mm |
| Rack System Control unit Type[1] | BDU100 | BDU100 |
| Module Quantity and Configuration | 7 Units in series | 11 Units in series |

[1]HV4875 battery module need to be used with BDU100 control unit.

# Dyness Rack System HV4

Dyness HV4 rack system is also designed for indoor use high-voltage systems, with a larger capacity of each module to fit medium C&I scenarios, to increase solar self-consumption, provide backup power or peak-shavings, etc.

## Features and Advantages

**Voltage Range**
179~876V

**High Safety LFP**
LFP & smart BMS

**Expandable**
Capacity up to 76.8kWh per cluster

**Tailor-made Cabinet**
Suitable for multi-module installation

**High Voltage**
High system effeiciency

**Wide Application**
Cover all needs in commercial fields

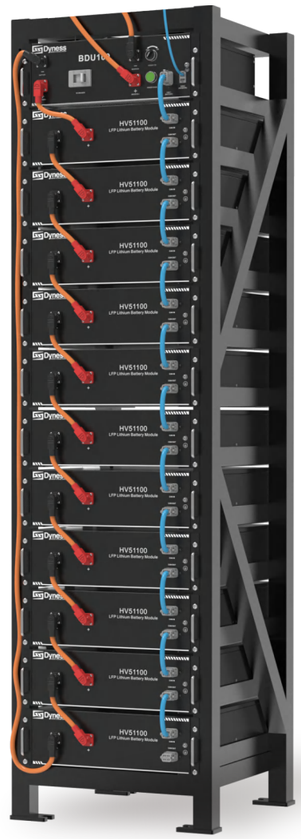


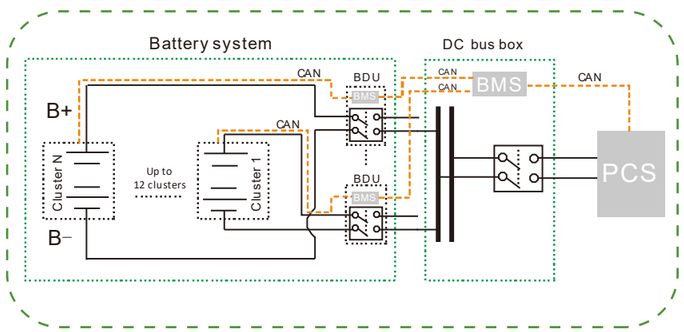




## Technical Parameters of HV51100

| Model | HV51100 |
|---|---|
| Battery Type | LiFePO4 |
| Nominal Battery Energy | 5.12kWh |
| Nominal Capacity | 100Ah |
| Nominal Voltage | 51.2V |
| Net Weight | 43.5kg |
| Dimension(W*D*H) | 481*535*140mm |
| Charging Temp. Range | 0-55℃ |
| Discharging Temp. Range | -10-55℃ |
| Communication | CAN |
| Design Life | 10+ Years |
| Calendar Life[1] | >6000 Cycles |
| Protection Level | IP20 |
| Expansion | Up to 15 units in series |
| Compatible Inverters | Goodwe/Solis/SAJ/Sinexcel/Hoymiles/Growatt/Ecatus/Sermatec /ATESS/Sunways etc. |
| Certification & Safety Standard | UN38.3/ICE62619 |

[1]Test conditions:0.2C Charging/Discharging,@25 ℃,80% DOD




HV51100



Rack System HV4 n×Rack System HV4(n≤12)

## Technical Parameters

| Model | Rack System HV4 | |
|---|---|---|
| Rack Type | PowerRack HV4-7s | PowerRack HV4-11s |
| Battery Module Type | HV51100 | HV51100 |
| Battery Module Quantity | 7 units | 11 units |
| Nominal Battery Energy | 35.84kWh | 56.32kWh |
| Nominal Capacity | 100Ah | 100Ah |
| Nominal Voltage | 358.4V | 563.2V |
| Operating Vol. Range | 313.6-403.2V | 492.8-633.6V |
| Nominal Power Output | 21.5kW | 33.79kW |
| Max. Power Output | 35.84kW | 56.32kW |
| Recommend Charging Current | 50A | 50A |
| Recommend Discharging Current | 50A | 50A |
| Net Weight | 397.5kg | 646.5kg |
| Dimension(W*D*H) | 548*568*1412mm | 548*568*2012mm |
| Rack System Control unit Type[1] | BDU100 | BDU100 |
| Module Quantity and Configuration | 7 Units in series | 11 Units in series |

[1]HV51100 battery module need to be used with BDU100 control unit.

# Product topology diagram

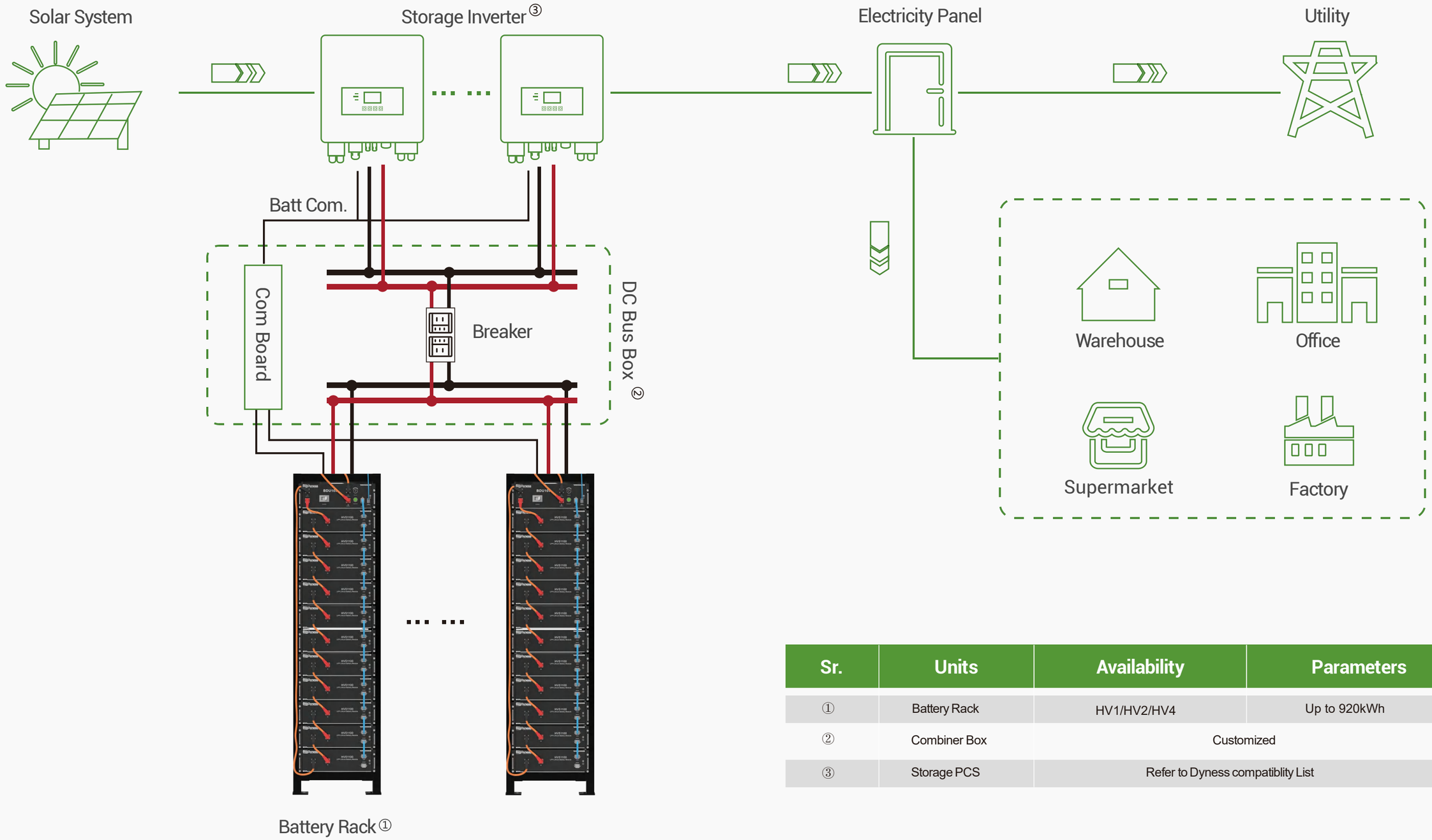


| Sr. | Units | Availability | Parameters |
|---|---|---|---|
| ① | Battery Rack | HV1/HV2/HV4 | Up to 920kWh |
| ② | Combiner Box | Customized | |
| ③ | Storage PCS | Refer to Dyness compatiblity List | |

# Dyness PowerStone

PowerStone is a newly designed battery system, with 1C charge rate and allows outdoor use. The integrated smart BMS system is widely compatible with branded PCS and integrated FANs & air conditioner provide better temperature control, thus making sure of the safe operation of the whole battery system.

NEW

## Features and Advantages

- 1C charge & discharge rate
- Extendable up to 1MWh
- Outdoor use
- Modular design




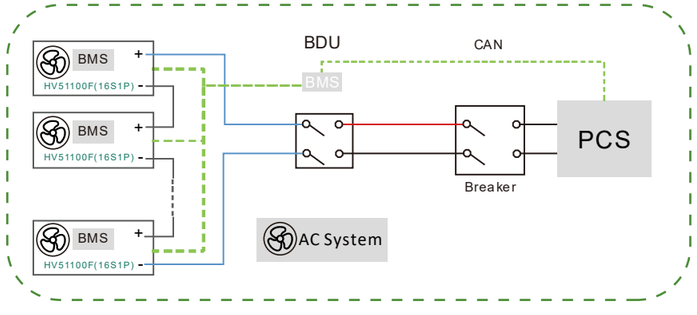


## Technical Parameters of PowerStone

| Model | PowerStone-15s |
|---|---|
| Battey Type | Li-ion(LFP) |
| Nominal Battery System Energy | 76.8kWh |
| Nominal Battery System Voltage | 768Vdc |
| Battery System Working Voltage Range | 672~864 Vdc |
| Battery System Weight | 1450 kg |
| Battery Cabinet Dimension(W*D*H) | 1315*1010*1880 mm |
| Battery Module Type | HV51100F |
| Battery Module Number | 15pcs |
| Expansion | Max.12 cabinets connected in parallel |
| Recommended C Rate | 1 |
| Max.Depth of Discharge | 100% |
| Battery System Protection Level | IP55 |
| Anticorrosion Grade | C5 |
| Altitude | ≤2000m |
| Communication | CAN/RS485 |
| Installation Environment | Outdoor |
| Cooling Method | Air conditioning cooling |
| Wiring | Cables enter and exit at the bottom of the cabinet |
| Humidity range | 5%~85%RH(No condensation) |
| Complance | UN38.3/IEC62619/IEC63056/IEC6247/EMC |
| Warranty [1] | Standard 5 Years (10 years optional) |
| **Battery Module Specifications** | |
| Battery Type | Li-ion(LFP) |
| Nominal Battery Module Voltage | 51.2Vdc |
| Nominal Battery Module Capacity | 100Ah |
| Nominal Battery Module Energy | 5.12kWh |
| Recommended Charge/Discharge Current | 100A |
| Max. Continuous Charge/Discharge Current | 100A |
| Battery Module Weight | 47kg |
| Dimension(W*D*H) | 548*554*152 .8mm |
| Battery Module Protection Level | IP20 |
| Cooling Method | Fan cooling |
| Charging Temp. Range | 0~55℃ |
| Discharging Temp. Range | -10~55℃ |
| **BDU Specifications** | |
| BDU model | **BDU-100** |
| Max. Continuous Charge/Discharge Current | 100A |
| Max. Continuous Charge/Discharge Power | 100kW |
| Battery System Protection Level | IP20 |
| Dimension(W*D*H) | 560*510*155.5 mm |
| Weight | 13kg |

[1]Applicable condition. Details refer to Dyness Limited Warranty Letter for PowerStone.

# DH200F

All-in-one integrated system design inside the Cabinet to fulfill C&I scenarios.

NEW

## Features and Advantages

- Overall solar+storage solution
- All-in-one design concept
- High-level safety design
- Convenient outdoor setup
- Allow flexible system design
- Capacity expandable to megawatts



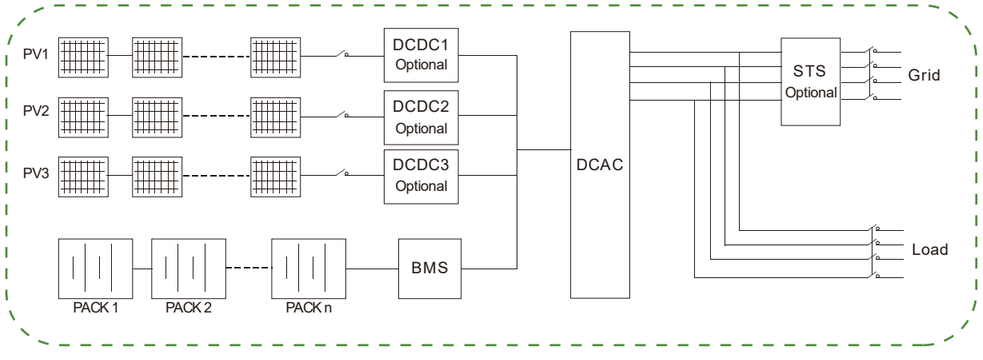




## Technical Parameters of DH200F

| | |
|---|---|
| **Battery Specifications** | |
| Battery Module Type | HV51280F |
| Cell Capacity | 280Ah |
| Battery Voltage Range | 672~864V |
| Nominal Current | 140A（0.5C） |
| System Storage Power | 215kWh |
| **AC Specifications (on-grid)** | |
| Nominal Power | 100kW |
| AC Nominal Voltage | 400V |
| Wiring | 3P4L+PE |
| Nominal Frequency | 50Hz |
| AC Maximum Current | 158A |
| **AC Specifications (off-grid)** | |
| Nominal Power | 100kW |
| AC Nominal Voltage | 400V |
| Wiring | 3P4L+PE |
| Nominal Frequency | 50Hz |
| AC Maximum Current | 158A |
| Unbalanced Load Capacity | 100% |
| **Photovoltaic Input** | |
| MPPT Voltage Range | 200-670V |
| MPPT channels | Up to three |
| Input Power | Single channel 50kW |
| **System Specifications** | |
| Dimensions (W*D*H) | 1850*1200*2250mm |
| Weight | ≈3300kg |
| System Round-trip Efficiency | 91%（TBD） |
| Operation Temperature | -20~55℃ |
| Operation Humidity | 0~95% |
| Protection Level | IP55 |
| Anti-corrosion Level | C4 |
| Noise Level | ≤75dB |
| Altitude | ≤3000m |
| Cooling System | Fan Cooling |
| Communication | Ethemnet /RS485/CAN/USB |
| Certification | CE/CQC |

# DH200F

Container Integration: Cabinet paralleled design in a container with lower system construction cost

NEW

## Features and Advantages

- **Standard 20/40 feet container design**
- **Pre-integration, less construction**
- **Container Stack-up ability**
- **Integrated unified management**
- **Cluster level balance management**
- **High availability**





Dyness | DISCOVER YOUR NATURE
www.dyness-tech.com

## Technical Parameters of DH200F

| | System Specifications | |
|---|---|---|
| Product Specification | 6 parallel/20ft container | 12 parallel/40ft container |
| AC Nominal Voltage | 400V | |
| Total System Power | 600kW | 1200kW |
| Single System Battery Configuration | A cluster of 15 modules | |
| PACK Quantity | 90 | 180 |
| System Power Storage | 1290kWh | 2580kWh |
| Dimensions (W*D*H) | 6.058m*2.438m*2.591m | 12.192m*2.438m*2.591m |
| Weight | About 21.8 tons | About 43.6 tons |
| Operation Temperature | -20~55℃ | |
| Operation Humidity | 0~95% | |
| Protection Level | IP55 | |
| Noise Level | ≤75dB | |
| Max Operation Altitude | ≤3000m | |
| Cooling System | Fan Cooling | |
| Communication | Ethemnet /RS485/CAN/USB | |
| Certification | CE/CQC | |

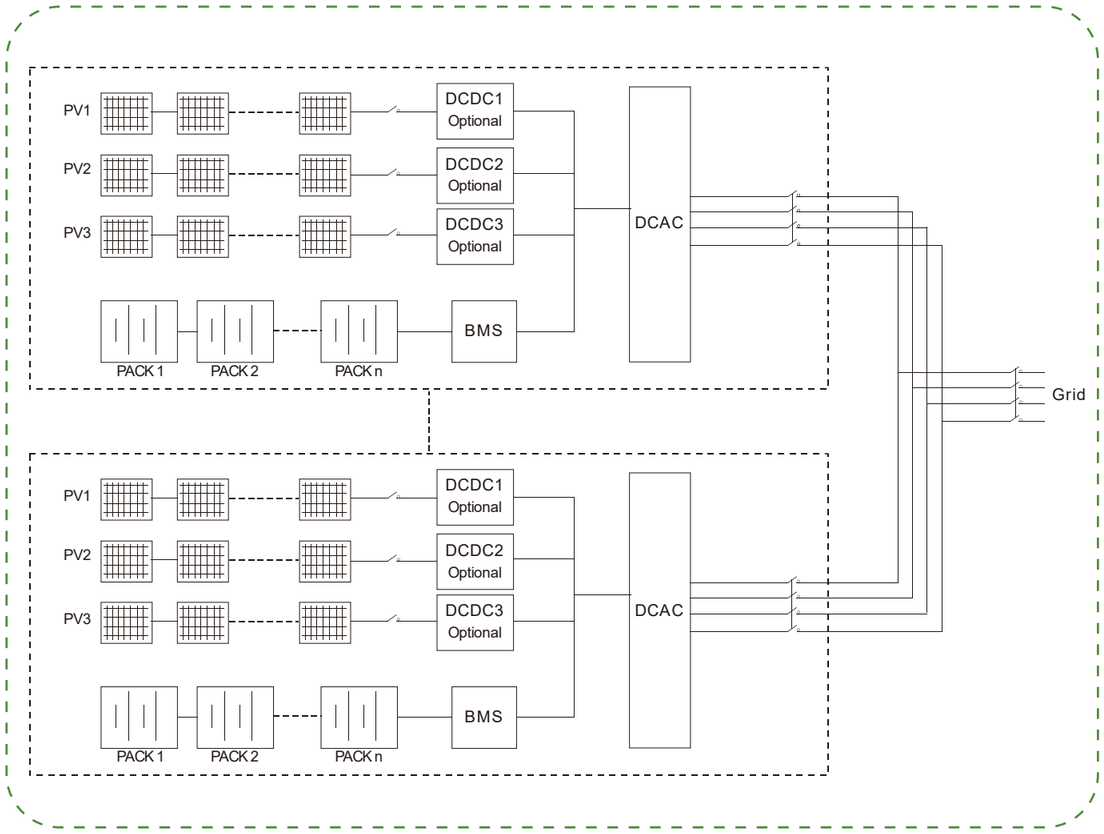

# Typical Application Scenarios

## *High energy consumption industry + energy storage*

The two high-energy enterprises generally use a lot of electricity and operate 24 hours a day, with high energy consumption and high basic electricity bills. The energy storage system can reduce electricity bills through local peak-to-valley price differences, reduce peak power, and reduce capacity fees to reduce the electricity price expenditure of high-energy-consuming enterprise users. At the same time, it can effectively reduce the cost of capacity expansion in response to the needs of enterprises for later expansion.



## *Photovoltaic storage charging station*

In the era of expensive gas and rising oil prices, new energy vehicles have become the choice of many car owners. In the booming development of new energy vehicles, the construction of charging infrastructure is also gradually accelerating, and new energy vehicle charging stations, as energy supply facilities to maintain the operation of new energy vehicles, can be said to be riding the wave of the trend.

Under the background of carbon neutrality, the supercharging station covering "photovoltaic + energy storage + charging" is favored by local governments. On the one hand, the addition of energy storage can help PV solve part of the redundancy of power generation and grid connection problems in the application process, and on the other hand, it can play a combination of advantages to driving the multi-directional development of PV, energy storage and charging pile.

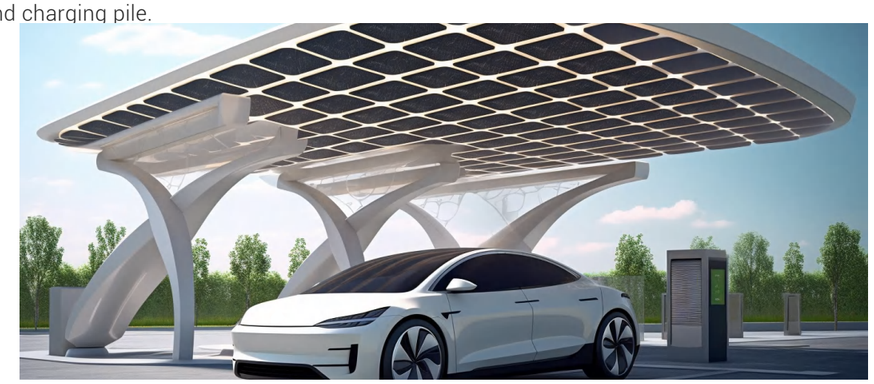

## *Data Center + Energy Storage Project*

The energy storage system connected to the data center can enhance the power supply reliability of the data center and prevent data loss caused by accidental power outages. The energy storage system enhances the economics of data center power operation through mechanisms such as peak shaving and capacity deployment, low carbon and energy saving.



## *Typical Application Scenarios*

The line is long and the voltage loss is large, which makes the electricity unable to work normally.
User impact load affects the stability of the rural power grid;
High harmonic pollution of the grid, easy aging of electrical appliances, affecting the safety of use;
The demand brought by the development trend of the power grid;
The terminal data monitoring energy storage system in the smart grid can solve the problems of weak grid terminal and capacity demand of the grid terminal.



## *Zero-carbon smart park + energy storage*

The factory area is large, and there are many equipment such as cabinets and computer rooms. Therefore, the electricity consumption has the characteristics of large power consumption, high load for a long time, and high energy consumption of equipment. The high price difference, which is suitable for energy storage projects. peak valley arbitrage.



## *Energy Storage + Microgrid*

Microgrid, also known as distributed energy islanding system, combines generators, loads, energy storage devices and control devices systematically to form a single controllable unit that supplies electricity and heat to customers at the same time. Microgrid + energy storage is suitable for remote areas with electricity, some of which are not covered by large grids, such as islands and remote mountainous areas.

